

BAROFIX

External barometric sensor

Assembly guide · USB and Bluetooth · firmware v2.1

This sensor lets you use BAROFIX on tablets and phones without a barometer, or leave a sensor fixed in the cabin. It connects over **USB** (by cable) or **Bluetooth** (powered by any USB charger, and shared by several phones at once). You can build it in an afternoon with two cheap boards, four wires and a 3D-printed case.

1. Parts

Part	Qty	Notes	Approx. price
ESP32-C3 SuperMini board	1	With USB-C connector and built-in Bluetooth.	€3–5
GY-BMP280 module, 3.3 V	1	6 pins: VCC, GND, SCL, SDA, CSB, SDO. It must be a **BMP280** (see warning).	€1–3
Thin wire	4 pieces	26–30 AWG silicone, about 4 cm each. Four colours is best.	—
3D-printed case	1	Base and lid (.stl files). About 4 g of PLA or PETG.	—
USB-C data cable	1	To upload the firmware and for USB mode. Charge-only cables won't work.	—
OTG adapter	1	Only for USB mode, if you don't have a USB-C to USB-C cable.	—

Tools: fine-tip soldering iron and solder, wire strippers, a computer with Arduino IDE and a 3D printer (or a printing service).

2. Wiring

All four connections are on the same side of the ESP32-C3. The BMP280's CSB and SDO pins stay unconnected.

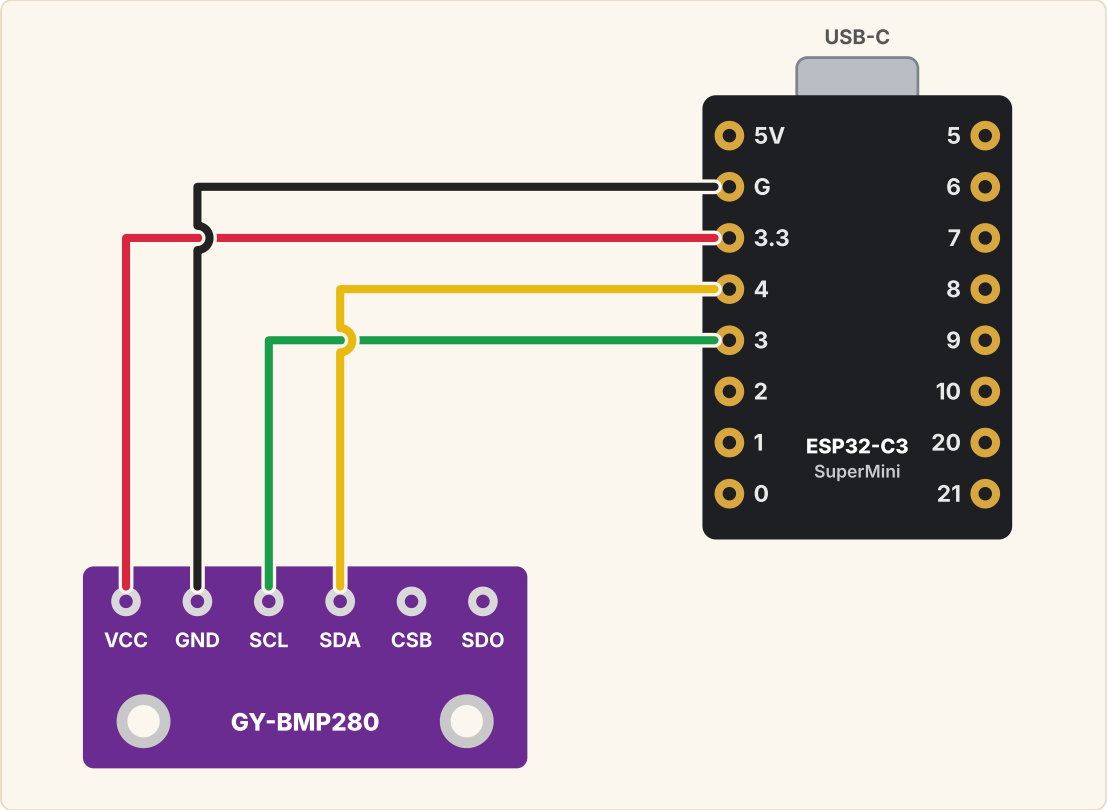

BMP280	ESP32-C3	Function
● VCC	3.3	3.3 V power
● GND	G	Ground
● SDA	4	I²C data
● SCL	3	I²C clock

> **Warning**
> - Connect VCC to the **3.3** pin, never to 5V.
> - Many modules are sold as "BME/BMP280". The firmware uses the **BMP280** library: if your module carries a BME280, it won't be detected (you'll see `ERR=NOSENSOR`).
> - Solder the wires straight into the holes, without pin headers; otherwise the boards won't fit in the case.

3. Uploading the firmware

1. Install **Arduino IDE 2** (arduino.cc).
2. In **Tools → Board → Boards Manager**, install **esp32** by Espressif Systems.
3. In **Tools → Manage Libraries**, install **Adafruit BMP280 Library** (accept its dependencies too).
4. Open `barofix_sensor.ino` and in **Tools** choose board **ESP32C3 Dev Module** and **USB CDC On Boot: Enabled**.
5. Connect the board with the USB-C cable, choose its port and click **Upload**.
6. Open the **Serial Monitor** at 115200 baud. Every 2 seconds you should see a line like `P=1013.25 T=21.4`.

If the upload fails or the board doesn't show up: hold the **BOOT** button, plug in the cable (or press RESET) and release BOOT. Click Upload again.

4. Printing the case

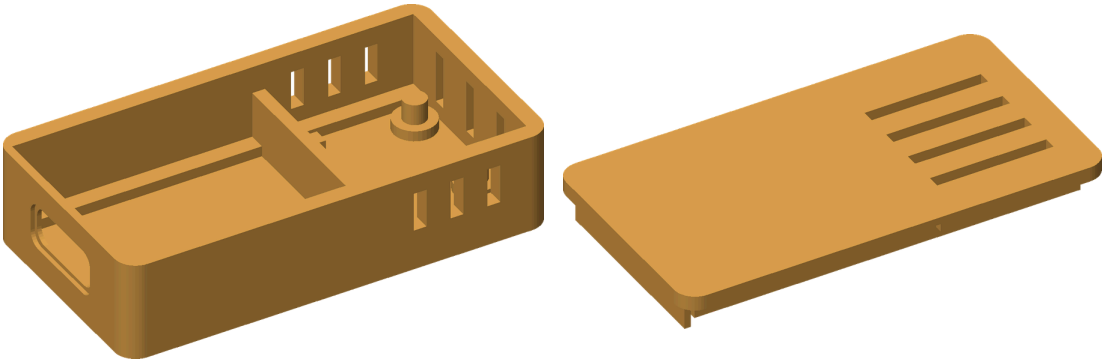

Print both parts as they are oriented, without supports: the base standing on its floor and the lid with its outer face on the bed. 0.2 mm layers, 3 perimeters and 20 % infill. PLA is fine in the cabin; PETG copes better with heat. Outside size: 40.5 × 21.8 × 10.8 mm.

5. Assembly

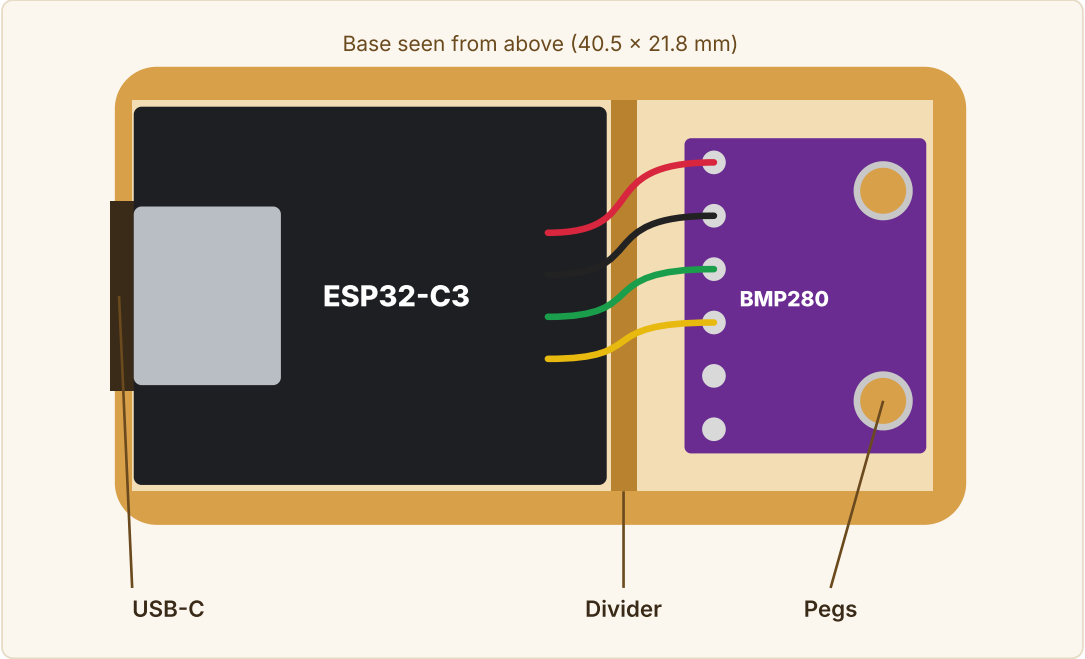

1. Check in the Serial Monitor that the sensor works **before** closing the case.
2. Put in the ESP32-C3 with the USB-C connector facing the hole in the wall and lower it straight down: the connector must sit against the thin wall so the cable goes all the way in.
3. Place the BMP280 components up, pins towards the divider, with its two holes on the pegs.
4. Fold the wires over the divider, which keeps the sensor away from the ESP32's heat.
5. Close the lid: the inner tab holds the USB connector from above. The vents let air reach the sensor.

6. Connecting to BAROFIX

Over USB

Plug the sensor into the phone or tablet (with an OTG adapter if needed). In BAROFIX, open **Settings → Sensor** and choose **External USB sensor**. Accept the prompt so BAROFIX can use the USB device (tick "Always").

Over Bluetooth

Power the sensor from any USB charger or power bank. In BAROFIX, open **Settings → Sensor**, choose **Bluetooth sensor** and tap **Pair sensor**. Pick the **BAROFIX-XXXX** sensor from the list. From then on BAROFIX reconnects by itself whenever the sensor is in range. Several phones can use the same sensor at once.

7. Calibration

You don't need to calibrate to follow the tendency. To read sea-level pressure, look up the QNH from a nearby official source (harbour office, weather station or airport METAR), enter it in **Settings → Calibration** and tap **Calibrate**.

8. Troubleshooting

Symptom	What to do
The firmware upload fails.	Use a USB data cable and the BOOT button trick (section 3).
`ERR=NOSENSOR`, or the app says it can't find the BMP280.	Check the four solder joints, that SDA goes to 4 and SCL to 3, and that the module is a BMP280 and not a BME280.
The phone doesn't recognise the USB sensor.	Try another cable or OTG adapter and accept BAROFIX's permission prompt.
BAROFIX-XXXX doesn't appear when pairing.	Check that the sensor has power and the phone's Bluetooth is on, and move closer.
Pressure changes with sun or heat.	Put the sensor in the shade, away from engines and anything that gets warm.

9. Licences and disclaimer

The firmware is released under the **MIT** licence. The case (.stl files) and this guide are released under **Creative Commons Attribution 4.0 (CC BY 4.0)**: you may use, modify and share them, crediting RDRP Studio.

This is a do-it-yourself project provided as is, with no warranty of any kind. It is not a certified meteorological instrument and does not replace official forecasts. RDRP Studio accepts no liability for damage arising from building or using it.